TEFCOLD®

GALAXY+ LOW PLUG-IN

Installation and User Manual

INTRODUCTION

Please kindly read this first

Dear Customer,

We would like to offer you the best quality products which have been produced in our modern facilities with the utmost care and passed through rigorous quality control processes. Please kindly read this manual first, before using the product, and keep it for reference.

This guide;

- This user guide will help you use your product quickly and safely,
- Please carefully follow the instructions for your safety,
- Keep it in an easily accessible place as you may need it later,
- Please also read the additional documentation provided with your product.

Intended Purpose;

- This product is a refrigerated display cabinet and is designed for commercial purposes; to be used in the display of foodstuffs within the cooling conditions specified below,
- The product should not be used outdoors,
- For the cooling class information of your product, please see the label with serial number.

CONTENT

1. IMAGES 4

1.1 SECTIONS 4

1.2 TRANSPORTATION 5

1.3 SERIAL ID PLATE 5

1.4 INSTALLATION AND EXTERNAL FACTORS 5

2. IMAGES 6

2.1 MULTIPLEXING 6

3. IMAGES 7

3.1 BLOCK END WALL 7

4. GAS FLOW 9

5. ELECTRIC SCHEME 10

6. INSTALLATION 12

6.1 ASEEMBLY 12

6.2 POWER 12

7. OPERATION 13

7.1 SWITCHING ON 13

7.2 CASE INSPECTION 13

7.3 MERCHANDISING 13

8. CLEANING AND GENERAL MAINTENANCE 13

8.1 GENERLAL 13

8.2 EXTERIOR / INTERNAL SURFACES, SHELVES AND AIR GRILLES 14

8.3 GLASS AND MIRROR 14

8.4 CASE WELL 14

9. CLEANING 14

9.1 FAN DECK 14

9.2 AIR COOLED CONDENSER AND COOLING FINS (P&P) 14

9.3 CONDENSATE TRAY (P&P) 15

9.4 WATER OUTLETS 15

9.5 LIGHTING 15

10. DEFROST 15

11. SERVICE REQUEST AND SAFETY 15

11.1 SERVICE SAFETY CHECKS 16

11.2 Disposal of Appliances Containing Flammable Refrigerants..... 16

11.3 ADDITIONAL WARNINGS..... 16

12. COSMETIC..... 17

13. ENGINEERING 26

1. IMAGES

1.1 SECTIONS

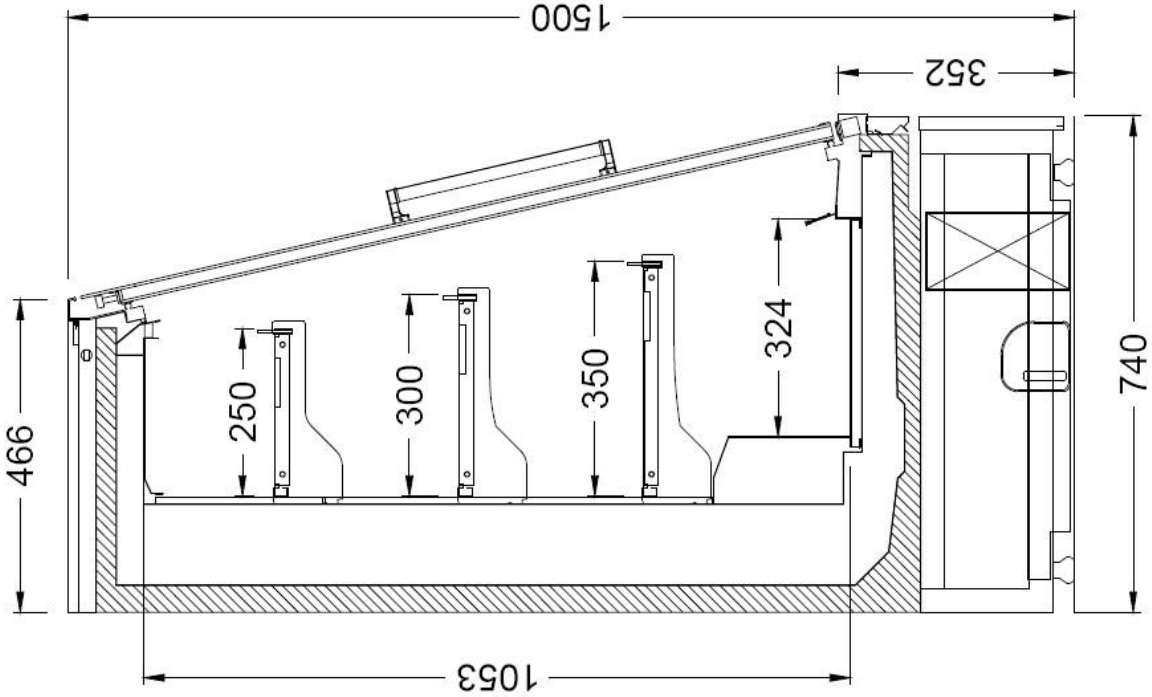

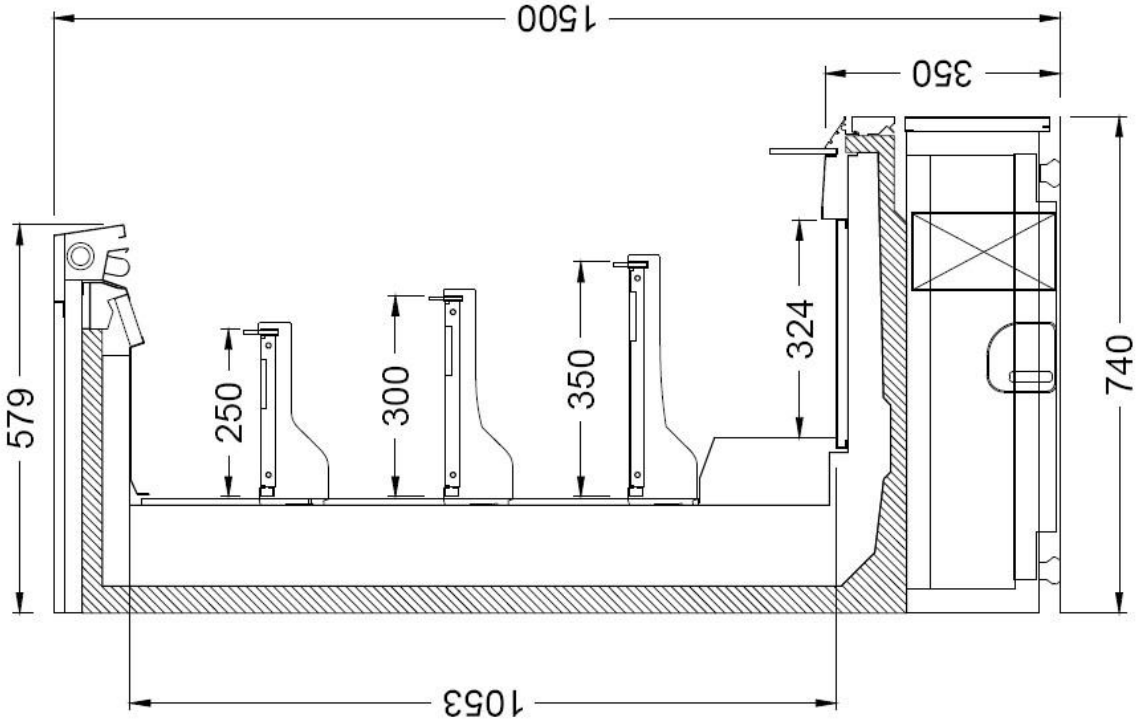

1.2 TRANSPORTATION

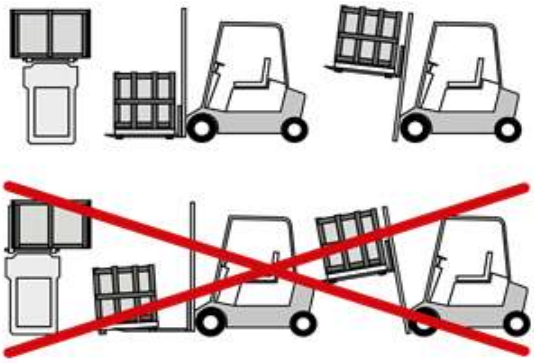

1.3 SERIAL ID PLATE

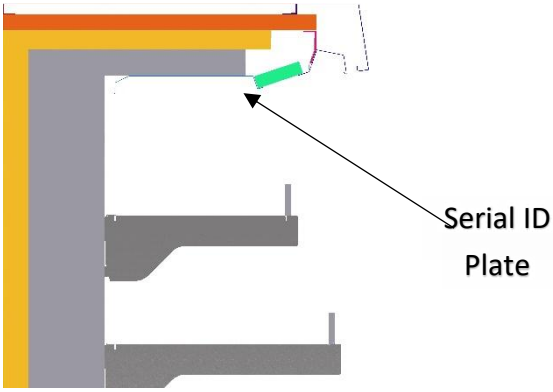

1.4 INSTALLATION AND EXTERNAL FACTORS

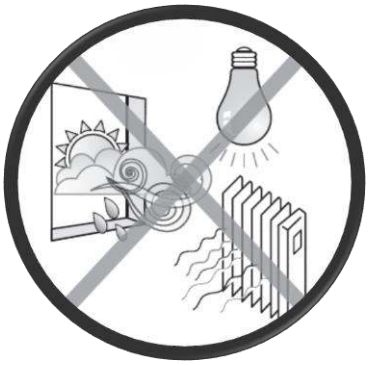

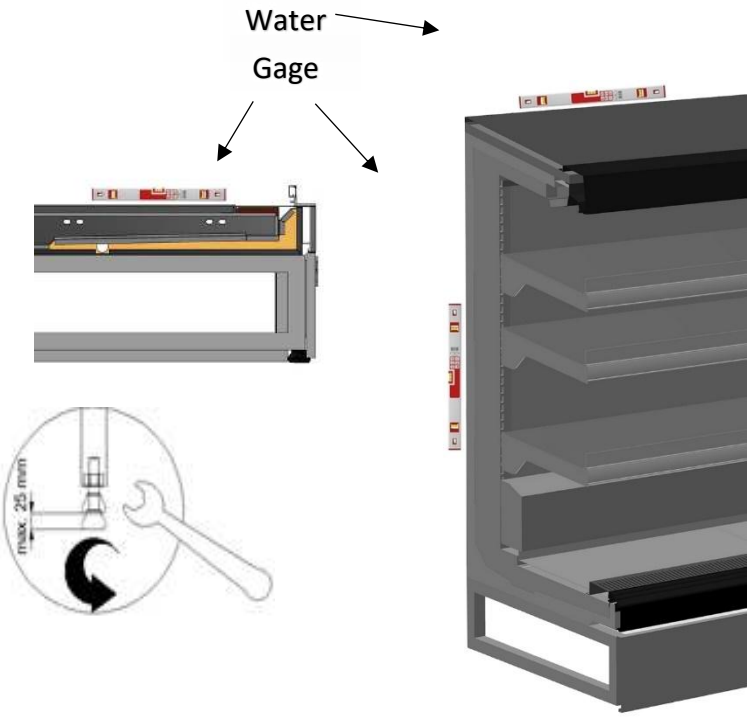

2. IMAGES

2.1 MULTIPLEXING

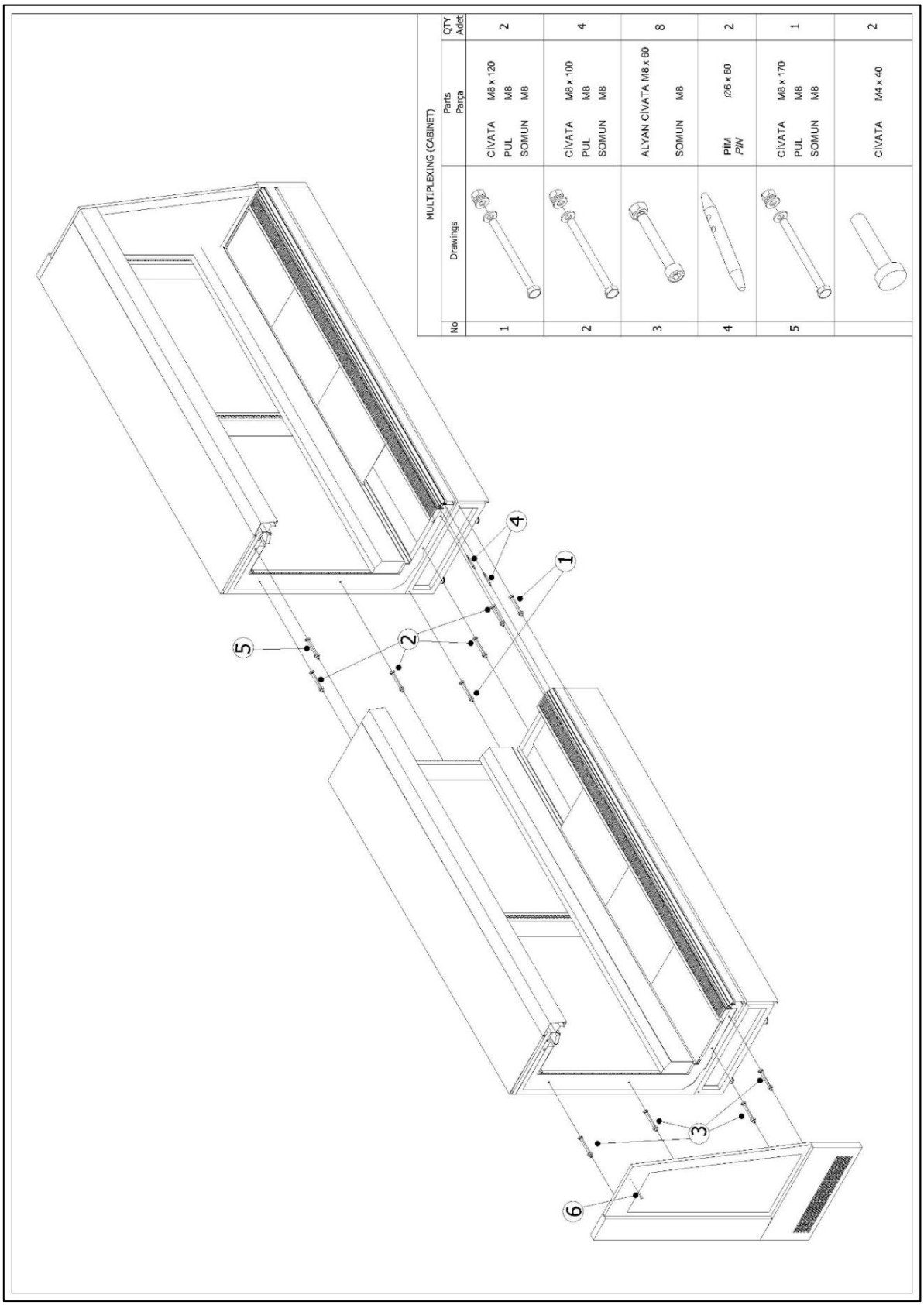

3. IMAGES

3.1 BLOCK END WALL

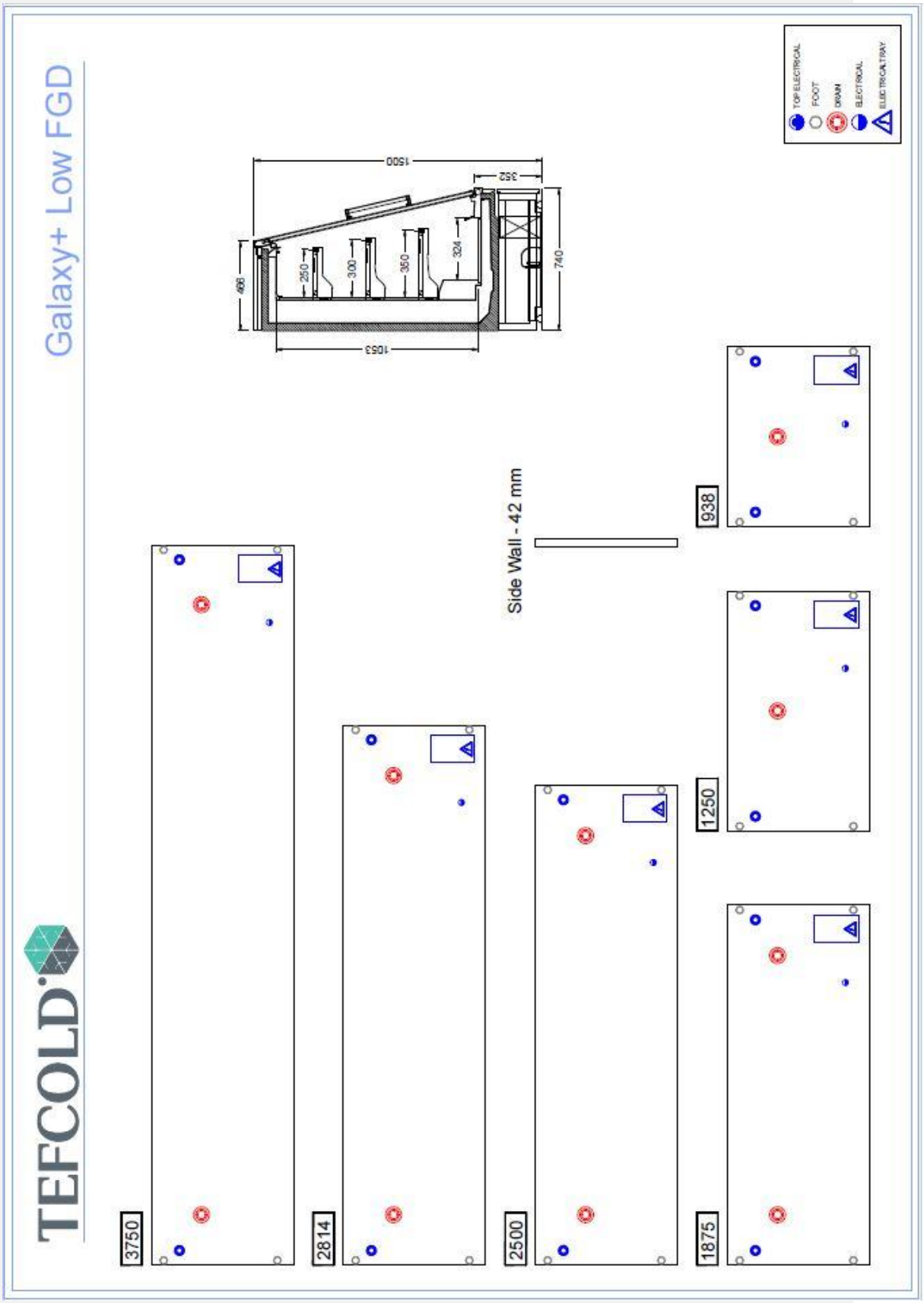

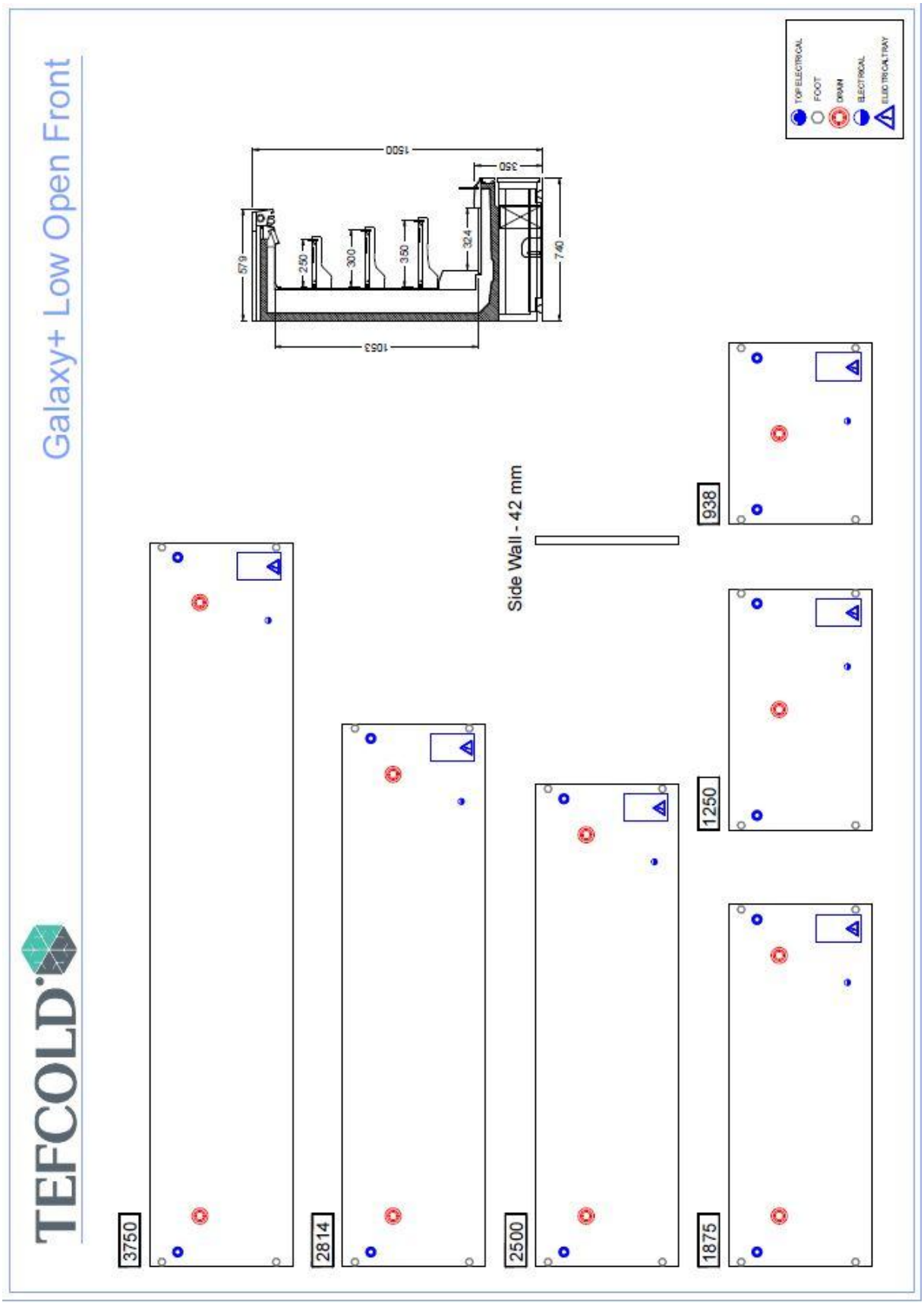
Galaxy+ Low Open Front
TEFCOLD
3750
2814
2500
1875
1250
938
Side Wall - 42 mm
1500
350
570
250
300
350
324
740
1053
TOP ELECTRICAL
FOOT
DRAIN
ELECTRICAL
ELECTRICAL TRAY

4. GAS FLOW

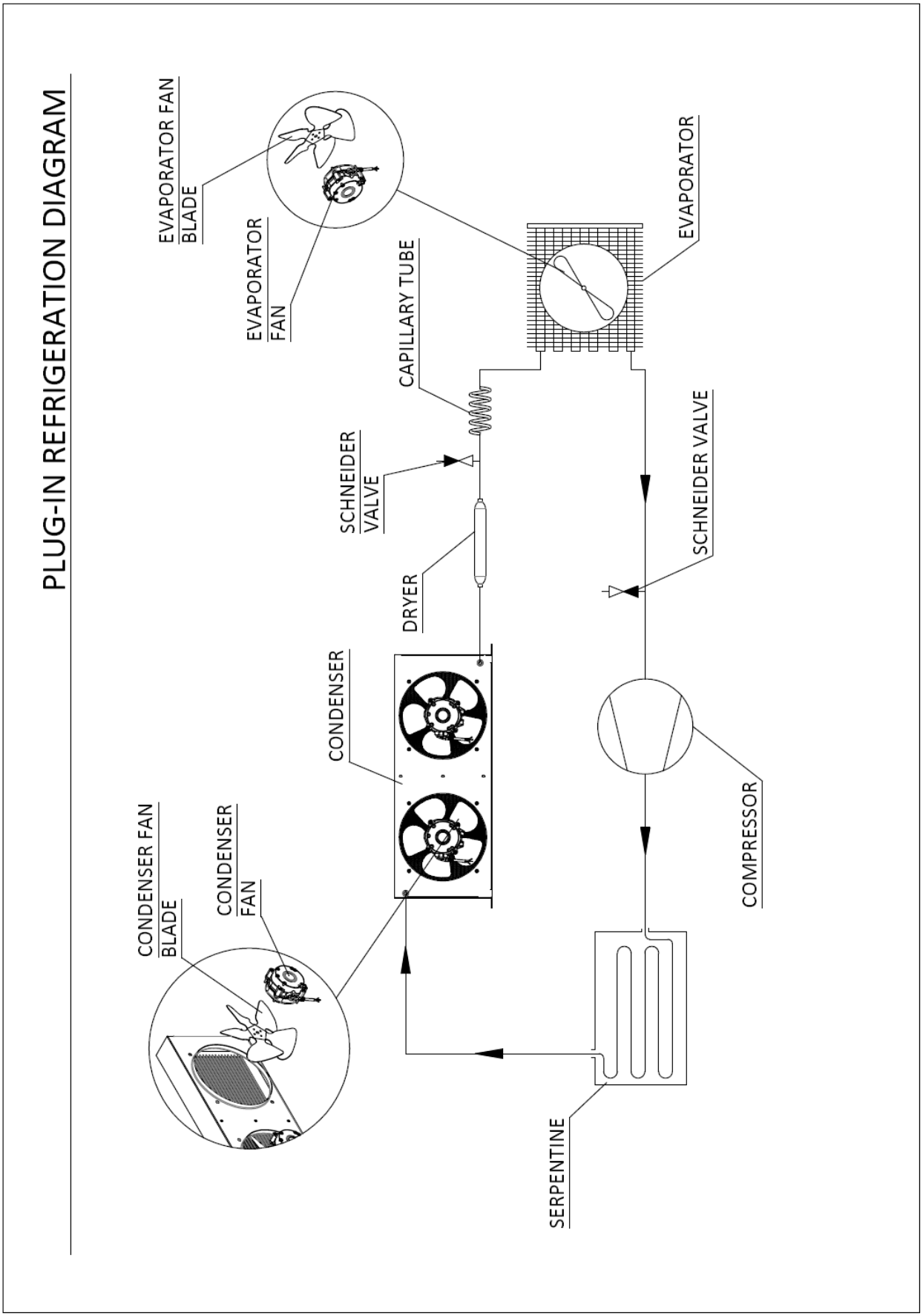
PLUG-IN REFRIGERATION DIAGRAM
EVAPORATOR FAN BLADE
EVAPORATOR FAN
CAPILLARY TUBE
EVAPORATOR
SCHNEIDER VALVE
DRYER
SCHNEIDER VALVE
CONDENSER
CONDENSER FAN BLADE
CONDENSER FAN
COMPRESSOR
SERPENTINE

5. ELECTRIC SCHEME

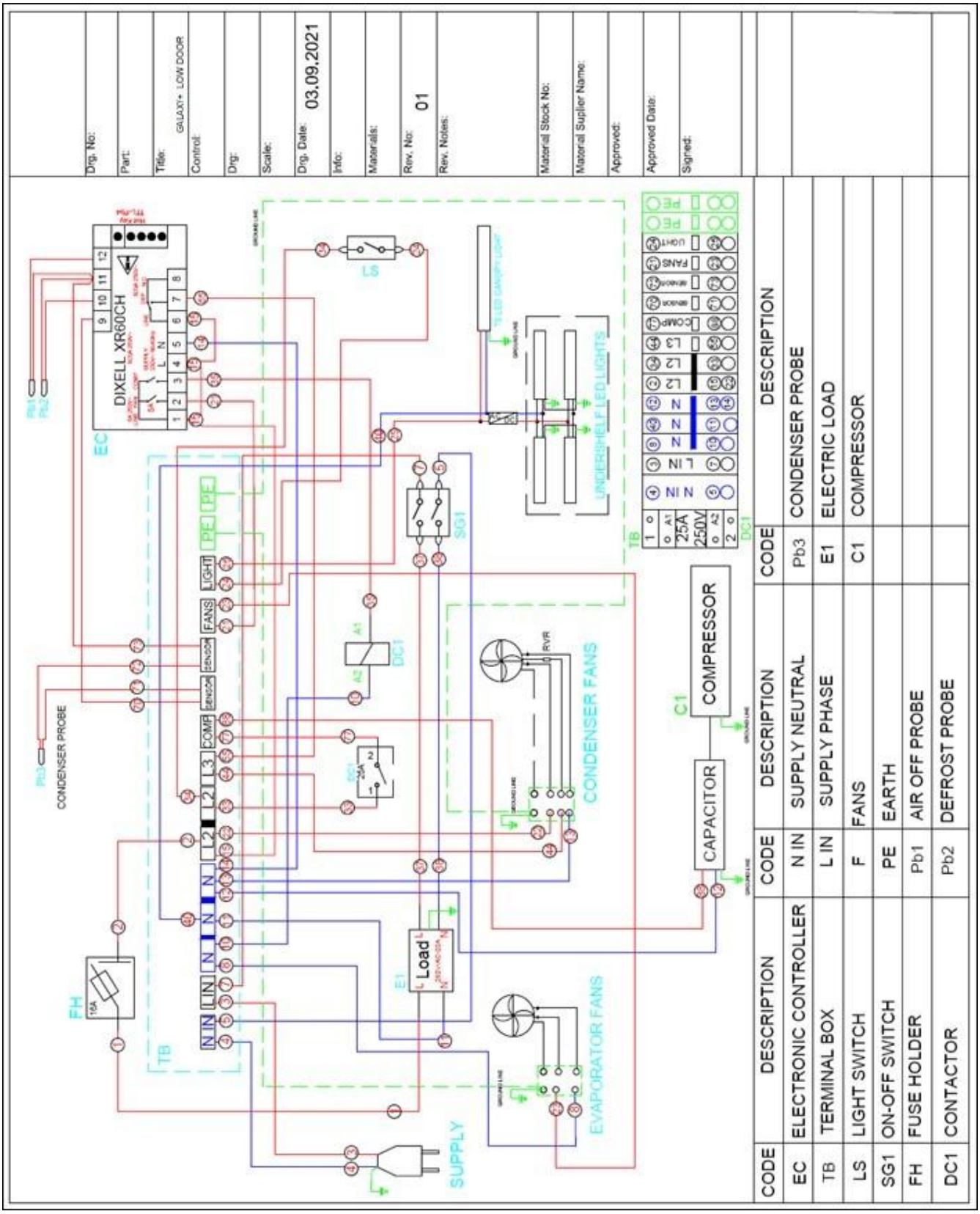

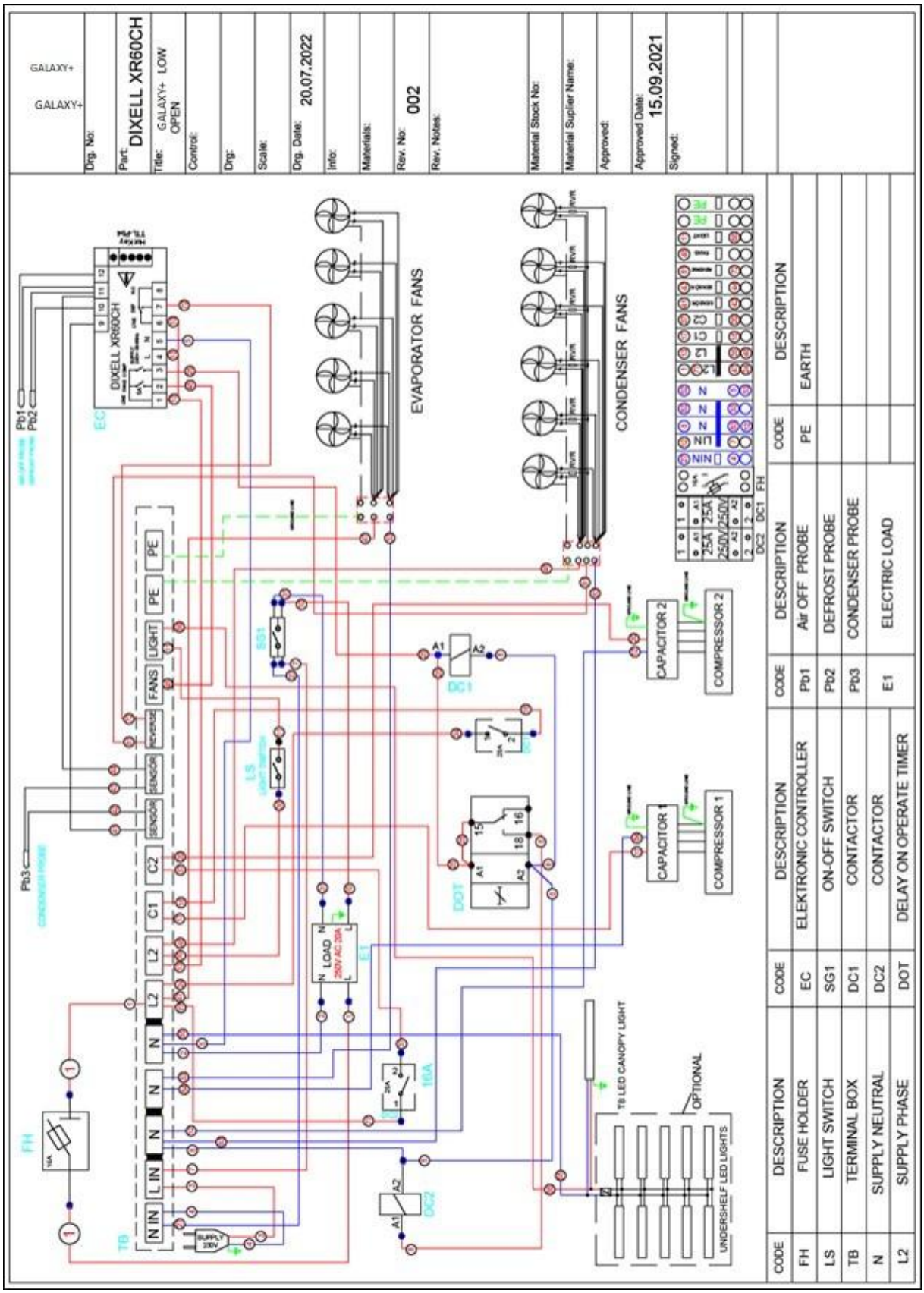
GALAXY+
GALAXY+
Drg. No:
Part: DIXELL XR60CH
Title: GALAXY+ LOW OPEN
Control:
Drg:
Scale:
Drg. Date: 20.07.2022
Info:
Materials:
Rev. No: 002
Rev. Notes:
Material Stock No:
Material Suplier Name:
Approved:
Approved Date: 15.09.2021
Signed:
EVAPORATOR FANS
CONDENSER FANS
DIXELL XR60CH
CAPACITOR 2
COMPRESSOR 2
CAPACITOR 1
COMPRESSOR 1
LOAD
TB LED CANOPY LIGHT
OPTIONAL
UNDERSHELF LED LIGHTS
CODE DESCRIPTION
FH FUSE HOLDER
LS LIGHT SWITCH
TB TERMINAL BOX
N SUPPLY NEUTRAL
L2 SUPPLY PHASE
CODE DESCRIPTION
EC ELEKTRONIC CONTROLLER
SG1 ON-OFF SWITCH
DC1 CONTACTOR
DC2 CONTACTOR
DOT DELAY ON OPERATE TIMER
CODE DESCRIPTION
Pb1 Air OFF PROBE
Pb2 DEFROST PROBE
Pb3 CONDENSER PROBE
E1 ELECTRIC LOAD
CODE DESCRIPTION
PE EARTH

6. INSTALLATION

6.1 ASEEMBLY

- All assembly work must be done by qualified personnel.
- Adjustable shelves should be placed in the appropriate holes on the back panel.
- It is recommended that placement of shelves is carried out by two personnel. First, remove the shelf to place it in the desired location. Then, after removing the shelf brackets and placing them in the desired position, place the shelf back
- Tags are placed at the front of the shelves
- Plexi holders are optional.

6.2 POWER

- As a standard, the case is supplied at 230V-50 Hz.
- Please ensure that the local power supply is proper.
- If the case is hardwired to the mains supply, a means of isolation must be provided.
- If a plug and socket supply is used, the plug should be accessible after the case is positioned.
- The case should be earthed.

7. OPERATION

7.1 SWITCHING ON

- Press the ON/OFF switch on the control panel to turn on your cabinet.
- Press on the switch to turn on the lights.

The main power switch is located next to the digital control screeN. Your cabinet is set to automatic defrost values. The temperature of the cabinet will be reflected on the control panel.

7.2 CASE INSPECTION

- Operating temperature, as indicated on the controller mounted on the front of the case, should be checked on a daily basis.
- Cases should be monitored on a daily basis for any undue noise, smell or malfunction. In such cases, immediate action must be taken.
- Regularly inspect the case for milk spillage or debris in the air grilles, case well and condensate tray. Remove and clean spillages and debris. The water tank should be checked regularly and care should be taken to keep it clean at all times.

7.3 MERCHANDISING

- Allow the case to operate at least for two hours before loading merchandise.
- When loading cases, do not exceed loading limits or allow product to overhang the shelf front edges or obstruct air return grilles.
- A tidy, well merchandised case will function more efficiently than a badly loaded one.
- Ensure free air flow around the merchandise and between the air discharge and return ducts.
- Always load chilled product. Your display case is designed to maintain the temperature not to reduce it. If warm product is loaded into the case, there may pass some time before the case reaches its desired operating temperature.

8. CLEANING AND GENERAL MAINTENANCE

8.1 GENERAL

- A regular and thorough cleaning regime is essential for the efficient and hygienic operation of your display case.
- Before undertaking any cleaning operation, ALWAYS turn the case off and if possible, disconnect it from the mains power supply.
- Avoid water splashing onto the case's electrical elements. If water splashing occurs, make sure that all electrical components are thoroughly dry before reconnecting to the power supply.

8.2 EXTERIOR / INTERNAL SURFACES, SHELVES AND AIR GRILLES

- Painted or metal surfaces should be cleaned with a cloth soaked in warm soapy water. Surfaces should be dried with soft cloth.
- Shelves should be removed for cleaning as above.

8.3 GLASS AND MIRROR

- Glass and mirrored end-walls should be cleaned with a suitable glass cleaner. Glass and mirrored surfaces may be wiped with a soft dry cloth.

8.4 CASE WELL

- Lift out deck trays and sweep or vacuum any debris from the case well.

9. CLEANING

9.1 FAN DECK

- Lift the fan plate in order to allow cleaning around the fans.
- ALWAYS make sure that fans are not running by switching the case off!

9.2 AIR COOLED CONDENSER AND COOLING FINS (P&P)

- Carefully vacuum dust and airborne debris from the condenser unit and cooling fins.
- Exercise care not to damage fins.

- Beware of the sharp fins and take care when cleaning this area.

Vacuum dust and debris from the condenser unit and cooling fins

9.3 CONDENSATE TRAY (P&P)

- The self-evaporating water tray which collects defrost water should be cleaned regularly.
- Spilled milk and other dairy products collecting in the condensate tray may lead to odor and should be cleaned immediately.

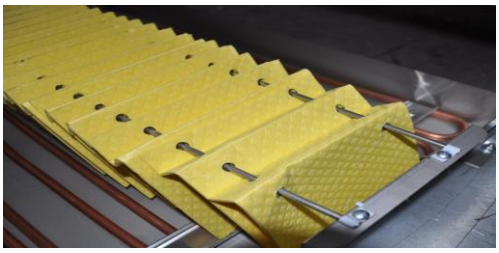

Condensate tray should be cleaned regularly

9.4 WATER OUTLETS

- Outlets for waste water should be cleaned regularly to ensure a continuous flow of waste water.

9.5 LIGHTING

- Lights can be wiped with a soft cloth after making sure they have been turned off beforehand.

10. DEFROST

- Your cabinet automatically defrosts twice a day. Your cabinet automatically defrosts for 16 minutes, every 3 hours.
- The first defrost period is activated at least 12 hours after the cabinet starts to operate.

11. SERVICE REQUEST AND SAFETY

- The operating temperature on the control panel must be checked daily. In the event of malfunction or failure, you should request a service engineer visit as soon as possible. If in doubt, turn off the case and disconnect it from the mains supply.
- In the event of case failure, remove perishables from the display case and store in an alternative, suitably chilled location to avoid deterioration of merchandise.
- Servicing of your case should only be undertaken by an approved Service Engineer. Failure to comply may invalidate your warranty.

11.1 SERVICE SAFETY CHECKS

1. Use a leak detector for a background check on the appliance. The detector must be certified for use with the specific refrigerant class. In case of flammable refrigeration detection, ventilate and evacuate the room immediately and notify the customer.
2. Make sure that an appropriate fire extinguisher is on site. Technicians must be trained to use these extinguishers.
3. Make sure that the area is well ventilated and free from flame or burning materials such as cigarettes, candles etc.
4. Check the appliance and its surroundings for any irregular signs of ignition. Do not operate in case of such signs and contact the manufacturer.
5. If the appliance is being transported, take extra care not to damage the appliances, especially the refrigerant carrying pipes and components.

WARNING: Check and follow the compressor manufacturer's instructions for the specific refrigerant for removal and recharging of the refrigerant.

11.2 Disposal of Appliances Containing Flammable Refrigerants

- A written plan for the disposal of scrap appliances carrying flammable refrigerants should be developed and followed by the service team.
- Prior to disposal of the device, the gas must be recovered or evacuated.
- The service technician shall comply with relative domestic laws and regulations while performing disposal.
- In case of recovery, follow the manufacturer's instructions for recovering the refrigerant in a suitable container and transporting it to a licensed refrigerant reclamation or destruction facility.
- Flammable hydrocarbon refrigerants that can be released to outside, such as R-600a or R-290 should be safely retrieved from the appliance and evacuated to the outside environment, away from ignition sources or air intakes. Ensure effective grounding and bonding of the appliance while removing the refrigerant.

11.3 ADDITIONAL WARNINGS

- The instructions concerning persons (including children) with reduced physical, sensory or mental capabilities, or lack of experience and knowledge and children playing with the appliance are not required. (EN 60335-2-89)
- The cabinets' load bearing capacity is 160 kg/m2, load the cabinet accordingly.
- Do not store explosive substances such as aerosol cans with a flammable propellant in this appliance.
- WARNING: Do not use electrical appliances inside the food storage compartments of the appliance, unless they are of the type recommended by the manufacturer. (EN 60335-2-89)

12. COSMETIC

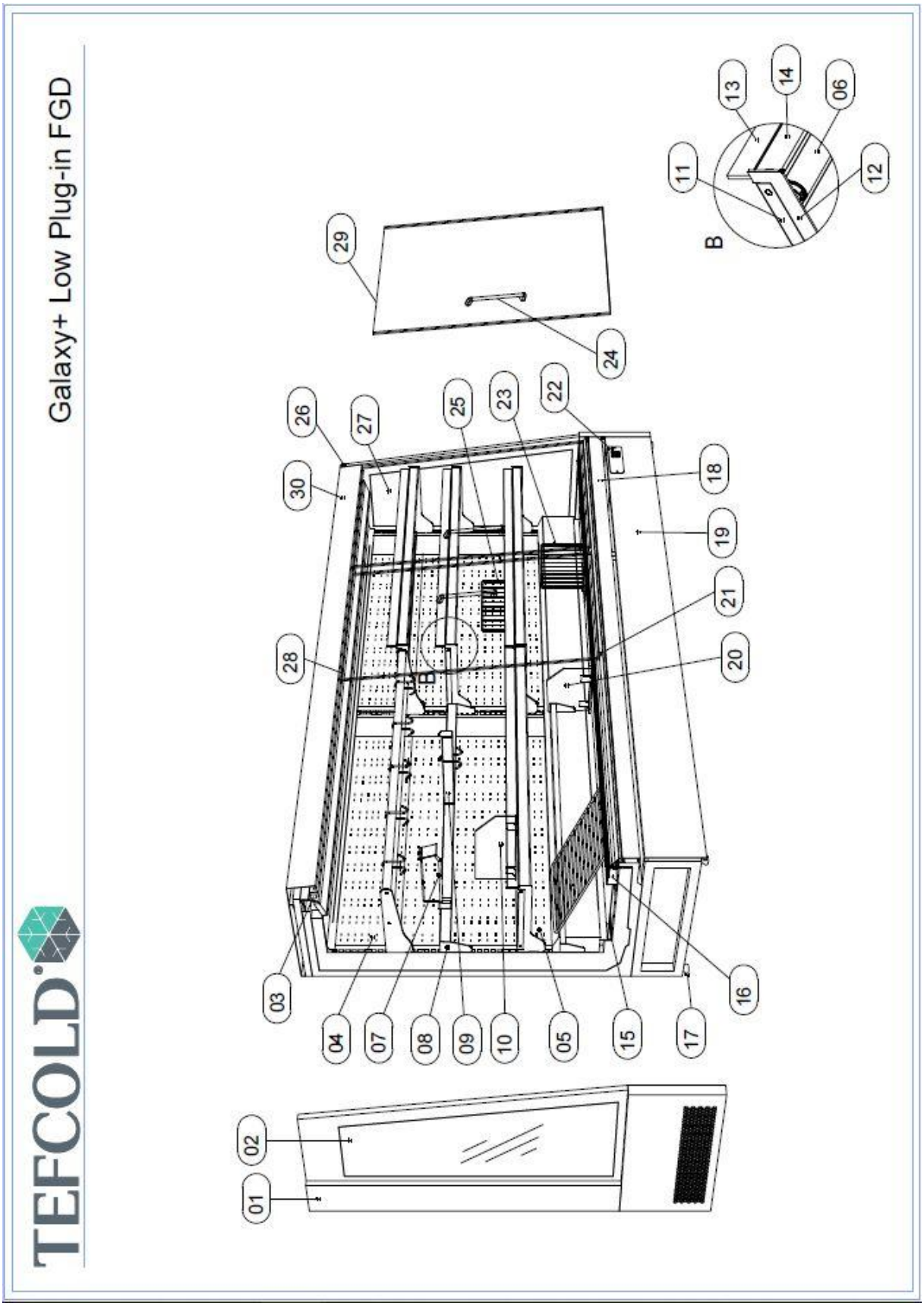
TEFCOLD
Galaxy+ Low Plug-in FGD
01
02
03
04
05
06
07
08
09
10
11
12
13
14
15
16
17
18
19
20
21
22
23
24
25
26
27
28
29
30
B

GALAXY+ LOW PLUG-IN FGD COSMETIC PART LIST				
NR.	**DESCRIPTION**	**NURDİL CODE**	**NURDIL VARIANT DESCRIPTION**	**TEFCOLD CODE**
1	Panoramic end wall left d:740mm h:1500 mm	2601739	D740 H1500	
	Panoramic end wall right d:740mm h:1500 mm	2601738	D740 H1500	
	Panoramic end wall left d:880mm h:1500 mm	2601907	D880 H1500	
	Panoramic end wall right d:880mm h:1500 mm	2601897	D880 H1500	
2	Panoramic end wall glass h:1500 mm	305418140004	D740/880 H1500	
3	Canopy T8 led tube 1500 mm 4000 K (938mm - 1875mm module)	310319291016	W1875	
	Canopy T8 led tube 1200 mm 4000 K (1250mm - 2500mm module)	310319291015	W1250-2500	
4	Top back panel 938 mm h: 1500 (938mm - 1875mm module)	2601566	W938 / W1875	
	Top back panel 1250 mm h: 1500 (1250mm - 2500mm module)	2601687	W1250 / W2500 /W3750	
5	Under back panel 938 mm h: 1500	2601564	W938 /W1250 / W2500 /W3750	
6	Under shelf lighting kit 938 mm (without led)	2201963	W938	
	Under shelf lighting led bar 4000 K 938 mm	310319291016	W938	
	Under shelf lighting led bar red color 938 mm	310319291018	W938	
	Under shelf lighting kit 1250 mm (without led)	2201946	W1250	
	Under shelf lighting led bar 4000 K 1250 mm	310319291015	W1250	
	Under shelf lighting led bar red color 1250 mm	310319291017	W1250	
7	Hook with price holder Ø 5 mm	2200974	W938 / W 1250	
8	938 mm supporting bar for hook and hanging profile	2200441	W938	
	1250 mm supporting bar for hook and hanging profile		W1250	
9	Hanging profile 400 mm	2200438	D740	
	Hanging profile 500 mm		D880	
10	Shelf 400 mm plexi divider d:740	2601972	D740	
	Shelf 500 mm plexi divider d:880		D880	
11	Shelf 400mm d:740 w:938	2200063	D740 W938 / 400MM	
	Shelf 400mm d:740 w:1250		D740 W1250 / 400MM	
	Shelf 450mm d:880 w:938		D880 W938 / 450MM	
	Shelf 450mm d:880 w:1250		D880 W1250 / 450MM	

	Shelf 500mm d:880 w:938		D880 W938 / 500MM	
	Shelf 500mm d:880 w:1250		D880 W1250 / 500MM	
	Shelf 400mm d:740 w:938 Stainless steel	2200503	D740 W938 / 400MM	
	Shelf 400mm d:740 w:1250 Stainless steel		D740 W1250 / 400MM	
	Shelf 450mm d:880 w:938 Stainless steel		D880 W938 / 450MM	
	Shelf 450mm d:880 w:1250 Stainless steel		D880 W1250 / 450MM	
	Shelf 500mm d:880 w:938 Stainless steel		D880 W938 / 500MM	
	Shelf 500mm d:880 w:1250 Stainless steel		D880 W1250 / 500MM	
12	Shelf bracket 400mm	2601386	D740	
	Shelf bracket 450mm		D880	
	Shelf bracket 500mm		D880	
	Shelf bracket 400mm Stainless steel	2601415	D740	
	Shelf bracket 450mm Stainless steel		D880	
	Shelf bracket 500mm Stainless steel		D880	
13	Shelf plexi riser 938 mm	2202507	W938	
	Shelf plexi riser 1250 mm		W1250	
14	Shelf price tag profile 938 mm	302214003271	W938	
	Shelf price tag profile 1250 mm		W1250	
15	Base deck for d:740 w:938 mm module	2202415	D740 W938	
	Base deck for d:740 w:1250 mm module		D740 W1250	
	Base deck for d:880 w:938 mm module		D880 W938	
	Base deck for d:880 w:1250 mm module		D880 W1250	
	Base deck for d:740 w:938 mm module Stainless steel	2601366	D740 W938	
	Base deck for d:740 w:1250 mm module Stainless steel		D740 W1250	
	Base deck for d:880 w:938 mm module Stainless steel		D880 W938	
	Base deck for d:880 w:1250 mm module Stainless steel		D880 W1250	
16	Air return grill 938 mm module	2601682	W938	
	Air return grill 1875 mm module		W1875	
	Air return grill 1250 mm module		W1250	
17	Foot	311347381001	-	
18	Front panel for 938 mm module	2601408	W938	
	Front panel for 1250 mm module		W1250	
	Front panel for 1875 mm module		W1875	
	Front panel for 2500 mm module		W2500	
	Front panel for 938 mm module Stainless steel	2601692	W938	

	Front panel for 1250 mm module Stainless steel		W1250	
	Front panel for 1875 mm module Stainless steel		W1875	
	Front panel for 2500 mm module Stainless steel		W2500	
19	Machinery front panel for 938 mm module	2601685	W938	
	Machinery front panel for 1250 mm module		W1250	
	Machinery front panel for 1875 mm module		W1875	
	Machinery front panel for 2500 mm module		W2500	
	Machinery front panel for 938 mm module Stainless steel	2601685 (Stainless steel)	W938	
	Machinery front panel for 1250 mm module Stainless steel		W1250	
	Machinery front panel for 1875 mm module Stainless steel		W1875	
	Machinery front panel for 2500 mm module Stainless steel		W2500	
20	Base deck plexi divider 320 mm d:740	2601973	D740	
	Base deck plexi divider 320 mm d:880		D880	
21	Door bottom hinge left	311343374021	-	
	Door bottom hinge right	311343374022	-	
22	Base deck wired divider 320 mm	not availab		
23	Plexi glass cover for machinery grill	2202404	-	
24	Door handle	2203004	-	
25	Shelf 400 mm wired divider	not availab	D740	
	Shelf 5000 mm wired divider	not availab	D880	
26	Blok end wall left d:740mm h:1500 mm	2601727	D740 H1500	
	Blok end wall right d:740mm h:1500 mm	2601726	D740 H1500	
	Blok end wall left d:880mm h:1500 mm	2601910	D880 D2005	
	Blok end wall right d:880mm h:1500 mm	2601861	D880 D2005	
27	Blok end wall inside mirror left d:740 h:1500 mm	2601915	D740 H1500	
	Blok end wall inside mirror right d:740 h:1500 mm	2601914	D880 H1500	
	Blok end wall inside mirror left d:880 h:1500 mm	2601737	D740 H1500	
	Blok end wall inside mirror right d:880 h:1500 mm	2601736	D880 H1500	
28	Door top hinge horizon	304239076306	-	
29	Front Door with transperant spacer h: 1500 right for cabinets 938 mm and 1875 mm	305418140001	W938/ 1875	
	Rear Door with transperant spacer h: 1500 left for cabinets 938 mm and 1875 mm	305418140002	W938/ 1875	
	Front Door with transperant spacer h: 1500 right for cabinets 1250 mm and 2500 mm	305418140006	W1250/2500	
	Rear Door with transperant spacer h: 1500 left for cabinets 1250 mm and 2500 mm	305418140005	W1250/2500	
30	Canopy trim for 938 mm module	2601698	W938	
	Canopy trim for 1250 mm module		W1250	
	Canopy trim for 1875 mm module		W1875	
	Canopy trim for 2500 mm module		W2500	

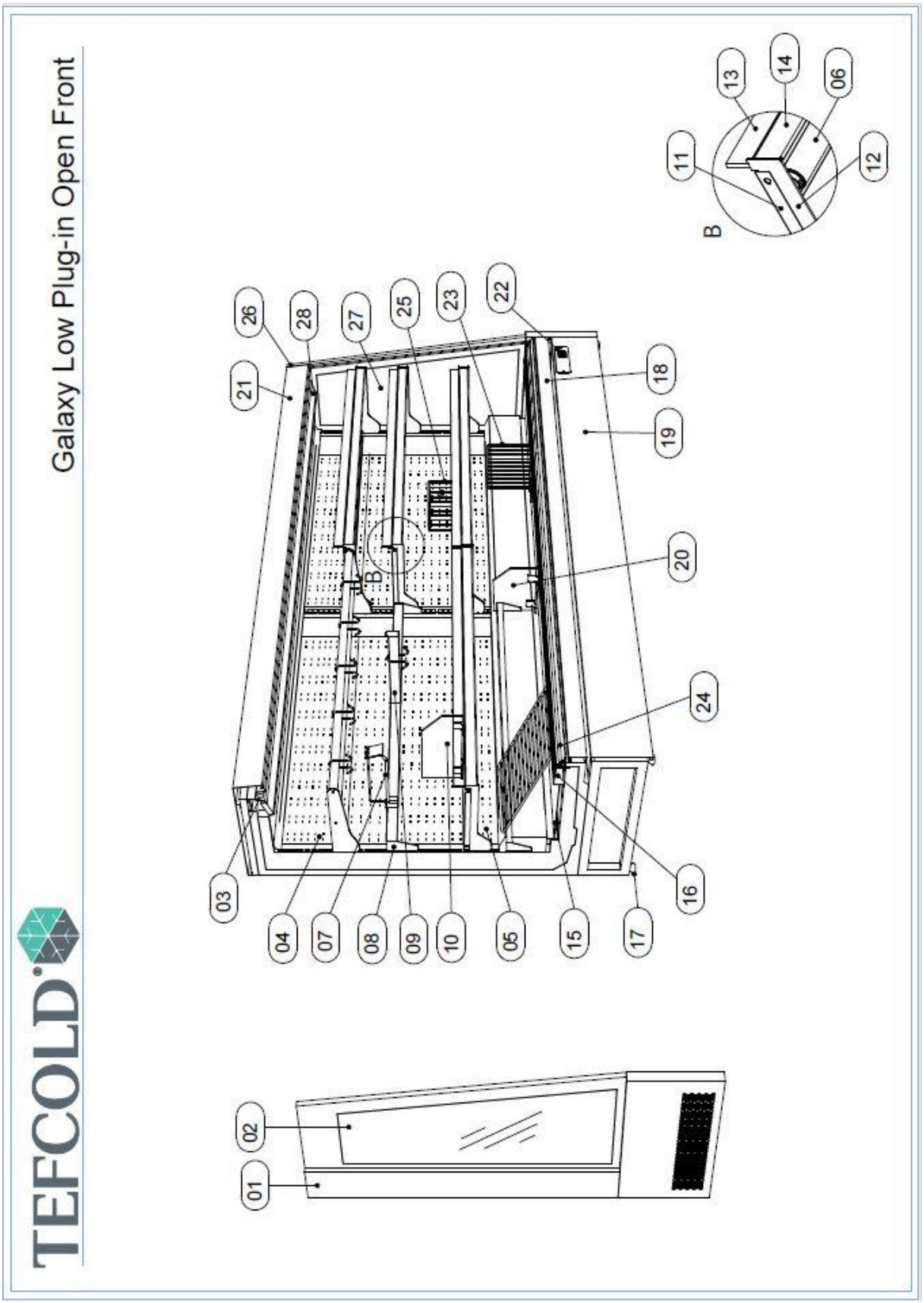
TEFCOLD
Galaxy Low Plug-in Open Front
01
02
03
04
05
06
07
08
09
10
11
12
13
14
15
16
17
18
19
20
21
22
23
24
25
26
27
28
B
B

GALAXY+ LOW PLUG-IN OPEN FRONT COSMETIC PART LIST				
NR.	**DESCRIPTION**	**NURDİL CODE**	**NURDIL VARIANT DESCRIPTION**	**TEFCOLD CODE**
1	Panoramic end wall left d:740mm h:1500 mm	2601739	D740 H1500	
	Panoramic end wall right d:740mm h:1500 mm	2601738	D740 H1500	
	Panoramic end wall left d:880mm h:1500 mm	2601907	D880 H1500	
	Panoramic end wall right d:880mm h:1500 mm	2601897	D880 H1500	
2	Panoramic end wall glass h:1500 mm	305418140004	D740/880 H1500	
3	Canopy T8 led tube 1500 mm 4000 K (938mm - 1875mm module)	310319291016	W1875	
	Canopy T8 led tube 1200 mm 4000 K (1250mm - 2500mm module)	310319291015	W1250-2500	
4	Top back panel 938 mm h: 1500 (938mm - 1875mm module)	2601566	W938 / W1875	
	Top back panel 1250 mm h: 1500 (1250mm - 2500mm module)	2601687	W1250 / W2500 /W3750	
5	Under back panel 938 mm h: 1500	2601564	W938 /W1250 / W2500 /W3750	
6	Under shelf lighting kit 938 mm (without led)	2201963	W938	
	Under shelf lighting led bar 4000 K 938 mm	310319291016	W938	
	Under shelf lighting led bar red color 938 mm	310319291018	W938	
	Under shelf lighting kit 1250 mm (without led)	2201946	W1250	
	Under shelf lighting led bar 4000 K 1250 mm	310319291015	W1250	
	Under shelf lighting led bar red color 1250 mm	310319291017	W1250	
7	Hook with price holder Ø 5 mm	2200974	W938 / W 1250	
8	938 mm supporting bar for hook and hanging profile	2200441	W938	
	1250 mm supporting bar for hook and hanging profile		W1250	
9	Hanging profile 400 mm	2200438	D740	
	Hanging profile 500 mm		D880	
10	Shelf 400 mm plexi divider d:740	2601972	D740	
	Shelf 500 mm plexi divider d:880		D880	
11	Shelf 400mm d:740 w:938	2200063	D740 W938 / 400MM	
	Shelf 400mm d:740 w:1250		D740 W1250 / 400MM	
	Shelf 450mm d:880 w:938		D880 W938 / 450MM	

	Shelf 450mm d:880 w:1250		D880 W1250 / 450MM	
	Shelf 500mm d:880 w:938		D880 W938 / 500MM	
	Shelf 500mm d:880 w:1250		D880 W1250 / 500MM	
	Shelf 400mm d:740 w:938 Stainless steel	2200503	D740 W938 / 400MM	
	Shelf 400mm d:740 w:1250 Stainless steel		D740 W1250 / 400MM	
	Shelf 450mm d:880 w:938 Stainless steel		D880 W938 / 450MM	
	Shelf 450mm d:880 w:1250 Stainless steel		D880 W1250 / 450MM	
	Shelf 500mm d:880 w:938 Stainless steel		D880 W938 / 500MM	
	Shelf 500mm d:880 w:1250 Stainless steel		D880 W1250 / 500MM	
12	Shelf bracket 400mm	2601386	D740	
	Shelf bracket 450mm		D880	
	Shelf bracket 500mm		D880	
	Shelf bracket 400mm Stainless steel	2601415	D740	
	Shelf bracket 450mm Stainless steel		D880	
	Shelf bracket 500mm Stainless steel		D880	
13	Shelf plexi riser 938 mm	2202507	W938	
	Shelf plexi riser 1250 mm		W1250	
14	Shelf price tag profile 938 mm	302214003271	W938	
	Shelf price tag profile 1250 mm		W1250	
15	Base deck for d:740 w:938 mm module	2202415	D740 W938	
	Base deck for d:740 w:1250 mm module		D740 W1250	
	Base deck for d:880 w:938 mm module		D880 W938	
	Base deck for d:880 w:1250 mm module		D880 W1250	
	Base deck for d:740 w:938 mm module Stainless steel	2601366	D740 W938	
	Base deck for d:740 w:1250 mm module Stainless steel		D740 W1250	
	Base deck for d:880 w:938 mm module Stainless steel		D880 W938	
	Base deck for d:880 w:1250 mm module Stainless steel		D880 W1250	
16	Air return grill 938 mm module	2601682	W938	
	Air return grill 1875 mm module		W1875	
	Air return grill 1250 mm module		W1250	
17	Foot	311347381001	-	
18	Front panel for 938 mm module	2601408	W938	
	Front panel for 1250 mm module		W1250	
	Front panel for 1875 mm module		W1875	

	Front panel for 2500 mm module		W2500	
	Front panel for 938 mm module Stainless steel	2601692	W938	
	Front panel for 1250 mm module Stainless steel		W1250	
	Front panel for 1875 mm module Stainless steel		W1875	
	Front panel for 2500 mm module Stainless steel		W2500	
19	Machinery front panel for 938 mm module	2601685	W938	
	Machinery front panel for 1250 mm module		W1250	
	Machinery front panel for 1875 mm module		W1875	
	Machinery front panel for 2500 mm module		W2500	
	Machinery front panel for 938 mm module Stainless steel	2601685 (Stainless steel)	W938	
	Machinery front panel for 1250 mm module Stainless steel		W1250	
	Machinery front panel for 1875 mm module Stainless steel		W1875	
	Machinery front panel for 2500 mm module Stainless steel		W2500	
20	Base deck plexi divider 320 mm d:740	2601973	D740	
	Base deck plexi divider 320 mm d:880		D880	
21	Canopy trim for 938 mm module	2601698	W938	
	Canopy trim for 1250 mm module		W1250	
	Canopy trim for 1875 mm module		W1875	
	Canopy trim for 2500 mm module		W2500	
22	Plexi glass cover for machinery grill	2202404	-	
23	Base deck wired divider 320 mm	not availab		
24	Display cabinet body bottom profile	2601390	W938 /W1250 / W2500 /W3750	
25	Shelf 400 mm wired divider	not availab	D740	
	Shelf 5000 mm wired divider	not availab	D880	
26	Blok end wall left d:740mm h:1500 mm	2601727	D740 H1500	
	Blok end wall right d:740mm h:1500 mm	2601726	D740 H1500	
	Blok end wall left d:880mm h:1500 mm	2601910	D880 D2005	
	Blok end wall right d:880mm h:1500 mm	2601861	D880 D2005	
27	Blok end wall inside mirror left d:740 h:1500 mm	2601915	D740 H1500	
	Blok end wall inside mirror right d:740 h:1500 mm	2601914	D880 H1500	
	Blok end wall inside mirror left d:880 h:1500 mm	2601737	D740 H1500	
	Blok end wall inside mirror right d:880 h:1500 mm	2601736	D880 H1500	

28	Honeycomb for 938 mm module	304234071010	W938	
	Honeycomb for 1250 mm module	304234071003	W1250	
	Honeycomb for 1875 mm module	304234071004	W1875	
	Honeycomb for 2500 mm module	304234071005	W2500	

13. ENGINEERING

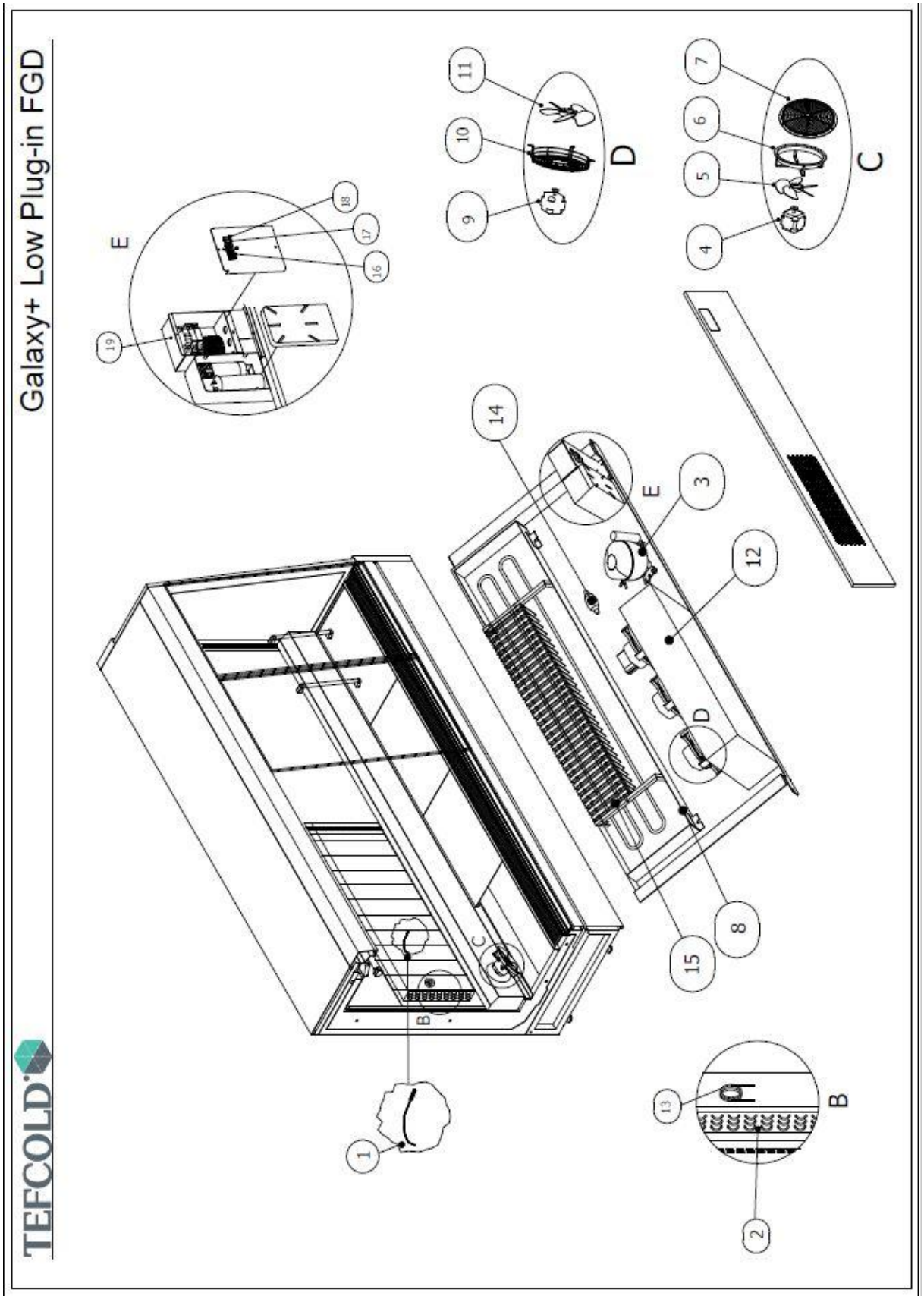

GALAXY+ LOW PLUG - IN FGD ENGINEERING				
NR.	**DESCRIPTION**	**NURDIL CODE**	**NURDIL VARIANT DESCRIPTION**	**TEFCOLD CODE**
1	Probe 3000mm (for DIXELL XR60CH)	310316280084	W938 W1250 W1875 W2500 W3750	
	Probe 6000mm (for DIXELL XR60CH AND CAREL IR33)	310316280085		
2	938 mm module evaporator	303222043515	W938	
	1250 mm module evaporator	303222043516	W1250	
	1875 mm module evaporator	303222043517	W1875	
	2500 mm module evaporator	303222043518	W2500	
3	Compressor Embraco NEU 6214 U - CSR (with terminal box) module for 938 mm and 1250 mm	303220036049	W 938 / W 1250	
	Compressor Embraco NT6224U (with terminal box) module for 1875 mm and 2500 mm	303220036045	W 1875 / W 2500	
4	Fan with fan guard Wellington ECR2 - OC 71	310323305015	W938 W1250 W1875 W2500 W3750	
5	Evaporator Fan Blade	310323306002	W938 W1250 W1875 W2500 W3750	
6	Plastic Fan Frame	310323307003	W938 W1250 W1875 W2500 W3750	
7	Plastic Fan Guard Grille	308296220115	W938 W1250 W1875 W2500 W3750	
8	Condansate water tray assembly 938 mm and 1250 mm module	2600137	W 938 AND W 1250	
	Condansate water tray assembly 1875 mm and 2500 mm module		W 1875 AND W 2500	
9	Condanser EC fan motors assembly fan and fan guard Wellington ECR-2 911	310323305013	W938 W1250 W1875 W2500 W3750	
10	Condenser Fan Blade for 938 mm and 1250 mm	310323306024	W 938 AND W 1250	
	Condenser Fan Blade for 1875 mm and 2500 mm	310323306002	W 1875 AND W 2500	
11	Condenser Guard Grille	310323310008	W938 W1250 W1875 W2500 W3750	
12	Micro channel condanser EU12 module for 938 and 1250 module	303221042062	W 938 AND W 1250	
	Micro channel condanser EU14 module for 1875 and 2500 module	303221042064	W 1875 AND W 2500	

13	Capillary for 938 and 1250 module 1,2 mm Ø 130 cm	2601232	W 938 AND W 1250	
	Capillary for 1875 and 2500 module 1,2 mm Ø 150 cm	2600099	W 1875 AND W 2500	
14	Copper dryer 50 gr	303224045006	W938 W1250 W1875 W2500 W3750	
15	Spunch	2600119	W938 W1250 W1875 W2500 W3750	
16	Digital controller(DIXELL XR20CH)	310316280076	W938 W1250 W1875 W2500 W3750	
	Digital controller(DIXELL XR60CH)	310316280057		
	Digital controller(DIXELL XR70CH)	310316280061		
	Digital controller(CAREL IR33)	310316280004		
17	On-off switch	310317282009	W938 W1250 W1875 W2500 W3750	
18	Light switch	310317282002	W938 W1250 W1875 W2500 W3750	
19	Electrical connection box	2600134	W938 W1250 W1875 W2500 W3750	

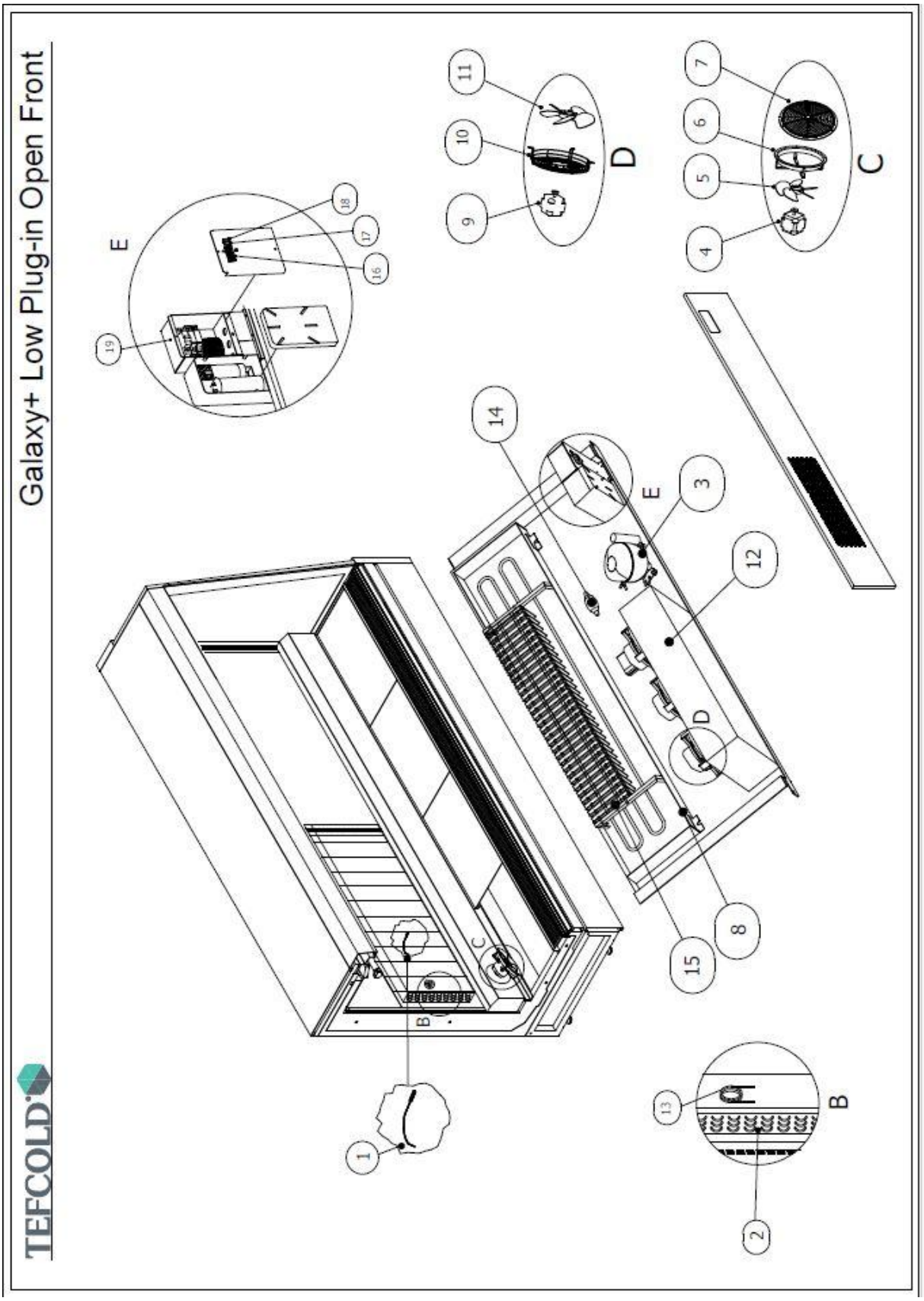
Galaxy+ Low Plug-in Open Front
TEFCOLD
1
2
3
4
5
6
7
8
9
10
11
12
13
14
15
16
17
18
19
A
B
C
D
E

GALAXY+ LOW PLUG - IN FGD ENGINEERING				
NR.	**DESCRIPTION**	**NURDIL CODE**	**NURDIL VARIANT DESCRIPTION**	**TEFCOLD CODE**
1	Probe 3000mm (for DIXELL XR60CH)	310316280084	W938 W1250 W1875 W2500 W3750	
	Probe 6000mm (for DIXELL XR60CH AND CAREL IR33)	310316280085		
2	938 mm module evaporator	303222043539	W938	
	1250 mm module evaporator	303222043540	W1250	
	1875 mm module evaporator	303222043541	W1875	
	2500 mm module evaporator	303222043542	W2500	
3	Compressor Embraco NEU 6214 U - CSR (with terminal box) module for 938 mm and 1250 mm	303220036053	W 938 / W 1250	
	Compressor Embraco NT6224U (with terminal box) module for 1875 mm and 2500 mm	303220036055	W 1875 / W 2500	
4	Fan with fan guard Wellington ECR2 - OC 71	310323305015	W938 W1250 W1875 W2500 W3750	
5	Evaporator Fan Blade	310323306002	W938 W1250 W1875 W2500 W3750	
6	Plastic Fan Frame	310323307003	W938 W1250 W1875 W2500 W3750	
7	Plastic Fan Guard Grille	308296220115	W938 W1250 W1875 W2500 W3750	
8	Condansate water tray assembly 938 mm and 1250 mm module	2600137	W 938 AND W 1250	
	Condansate water tray assembly 1875 mm and 2500 mm module		W 1875 AND W 2500	
9	Condanser EC fan motors assembly fan and fan guard Wellington ECR-2 911	310323305013	W938 W1250 W1875 W2500 W3750	
10	Condenser Fan Blade for 938 mm and 1250 mm	310323306024	W 938 AND W 1250	
	Condenser Fan Blade for 1875 mm and 2500 mm	310323306002	W 1875 AND W 2500	
11	Condenser Guard Grille	310323310008	W938 W1250 W1875 W2500 W3750	
12	938 mm module Condenser	303221042063	W 938 AND W 1875	
	1250 mm module Condenser	303221042064	W 1250	
	2500 mm module Condenser	303221042067	W 1875 AND W 2500	
13	Capillary for 938 and 1250 module 1,2 mm Ø 130 cm	2601232	W 938 AND W 1250	
	Capillary for 1875 and 2500 module 1,2 mm Ø 150 cm	2600099	W 1875 AND W 2500	

14	Copper dryer 50 gr	303224045006	W938 W1250 W1875 W2500 W3750	
15	Spunch	2600119	W938 W1250 W1875 W2500 W3750	
16	Digital controller(DIXELL XR20CH)	310316280076	W938 W1250 W1875 W2500 W3750	
	Digital controller(DIXELL XR60CH)	310316280057		
	Digital controller(DIXELL XR70CH)	310316280061		
	Digital controller(CAREL IR33)	310316280004		
17	On-off switch	310317282009	W938 W1250 W1875 W2500 W3750	
18	Light switch	310317282002	W938 W1250 W1875 W2500 W3750	
19	Electrical connection box	2600134	W938 W1250 W1875 W2500 W3750	