FOCUS 151

FRONT: Sticker 1600 x 638 mm

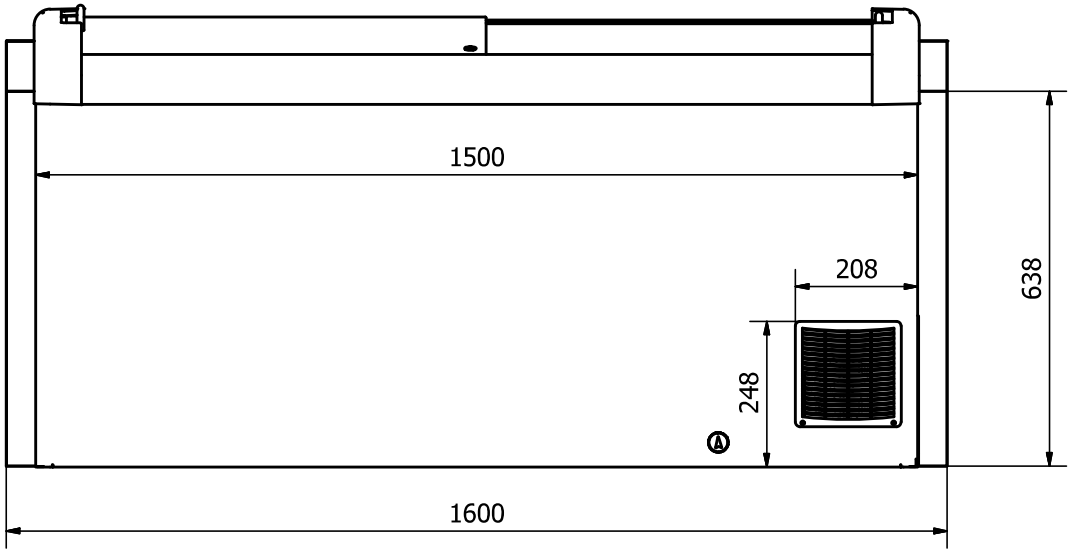

RIGHT SIDE: Sticker 600 x 723 mm

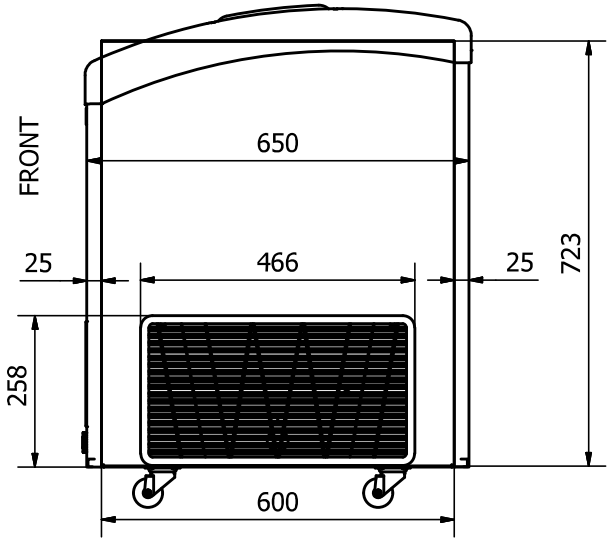

BACK: Sticker 1600 x 723 mm

LEFT SIDE: Sticker 600 x 723 mm

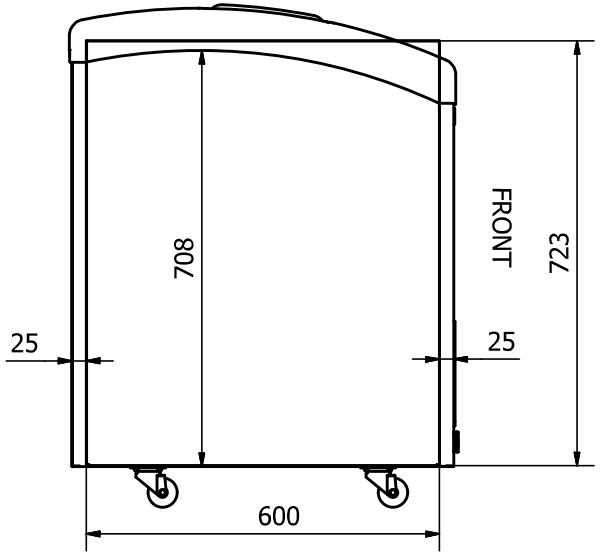

Comments: The FRONT and the BACK stickers will be taken around the corners by approx. 50 mm in each side.
The SIDE stickers will be mounted approx. 25 mm from the FRONT and 25 mm from the BACK.
Be aware that by mounting of sticker on cabinet, the curved sides means, that we on the front cut off a bit in the top. From 10 to 25 mm of the sticker will be cut off in a curve. We could also make a small cut in the top of the front sticker along the frame of FOCUS, if it is too large.
Be aware that by mounting of stickers on the BACK of cabinet,
we cut approx. 15 mm off the top of the sticker.

Designed by	Checked by	Approved by	Date		Date	
Marina Pedersen					05-08-2020	
Elcold Aps		Streamer measurements 4-sided, mm				
		Focus 151		Edition	Sheet 1 / 1	